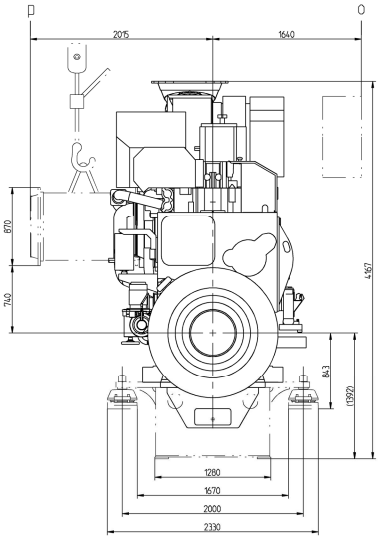

BEARING WET SUMP

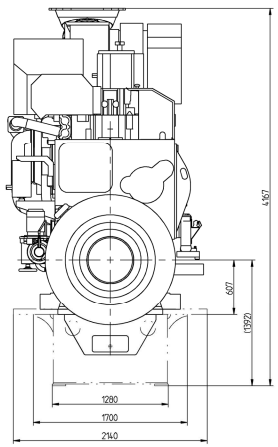

WET SUMP

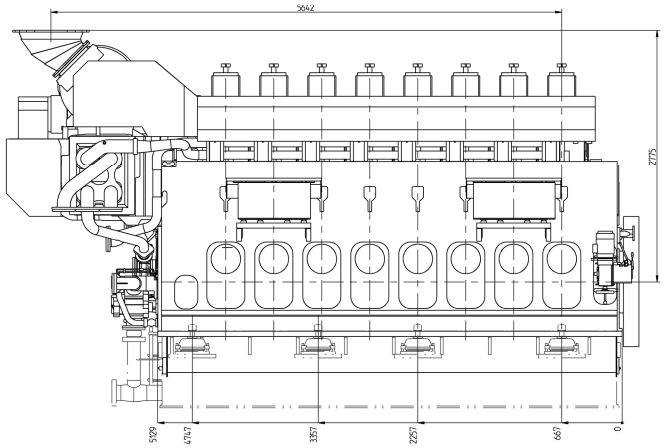

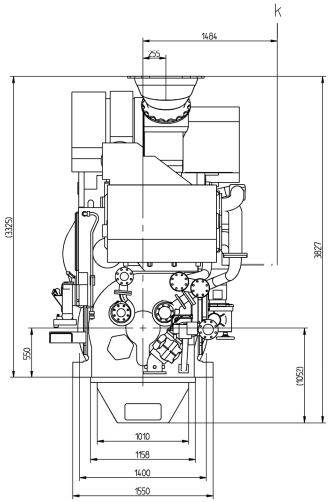

DRY SUMP

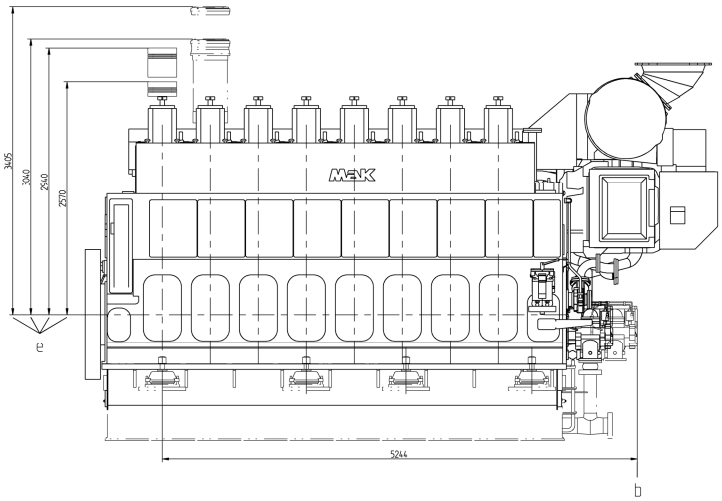

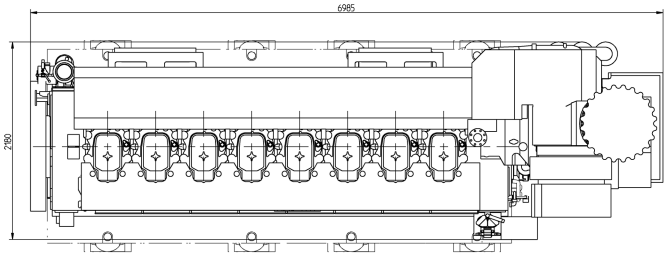

Anmerkung / REMARKS	
b	SPACE REQUIRED FOR MEASURING TORSIONAL VIBRATIONS, AND/OR FOR REMOVAL OF THE VIBRATION DAMPER AND/OR LUBOIL PUMP
e	SPACE REQUIRED FOR REMOVAL OF PISTON AND CYLINDER LINER REDUCED REMOVAL HEIGHT FOR CYLINDER LINER 2940mm
k	SPACE REQUIRED FOR TERMINAL SET
o	SPACE REQUIRED FOR TURBOCHARGER SHAFT
p	SPACE TRQUIRED FOR CHARGE AIR COOLER REMOVING

Gewicht trocken mit flacher Oelwanne
WEIGHT DRY WITH DRY SUMP

CATERPILLAR MOTOREN GmbH & Co. KG RESERVES THE RIGHT TO MODIFY AND AMEND DATA AT ANY TIME. ANY LIABILITY FOR ACCURACY OF INFORMATION PROVIDED IS EXCLUDED. WE WILL SUPPLY FURTHER BINDING DATA IN CONNECTION WITH A CORRESPONDING ORDER.

ALL RIGHTS RESERVED. NO PART OF THIS PUBLICATION MAY BE REPRODUCED OR COPIED IN ANY FORM, WITHOUT PRIOR WRITTEN PERMISSION OF CATERPILLAR MOTOREN GmbH & Co. KG.

(gesehen/geprüft)	CAD-P	Nachbaufirma (Manufacturer)	Zeichnungs-Nr. (Manufacturer's drawing No.)
Gerät (Unit) 8M32C	VT2		Modell-Daten/Model-Data 8M32C_CFWS 1.5 work Zchngs-Daten/Drwng-Data 8M32C_CFWS 1.5 work
		Allgemeintoleranzen (General tolerances) ISO 2768 - mK	Maßstab 1:20 Gewicht 49.000 kg
		Oberflächen (Surfaces) ISO 1302	Werkstoff (Material)
	Datum	Name	Benennung (Description)
Bearb.	26.03.2014	Fricke	Motor - Einbauzeichnung
Gepr.	26.03.2014	Toth	ENGINE INSTALLATION DRAWING
Norm			
Fert.			
CATERPILLAR			Zeichnungs-Nr. (Drawing No.) 8M32C CFWS — Blatt 1 / 1 Bl.
Zust.	Aenderung	Datum	Name — Urspr. — Ers. f. — Ers. d.

Allgemeintoleranzen ISO 2768 mK
Maße bis 1 | 3 | 6 | 30 | 120 | 400 | 1000 | 2000 | 4000
Toleranz ±0,1 | ±0,2 | ±0,5 | ±0,8 | ±1,2 | ±2 | ±3 | ±4

Änderungsindex | Datum | Name | Änderungen